ELYSIUM

Elysium 2021 Virtual Summit

September 29-30, 2021

Elysium Product Updates

Dan Dezarov

Manager of Applications and Services

Elysium Inc.

Speaker

Dan Dezarov

Manager of Applications & Services

ELYSIUM

© 2021 Elysium – Confidential & Proprietary

Agenda

© 2021 Elysium – Confidential & Proprietary

ELYSIUM

Elysium | Product Updates

Agenda

Day 1

- 3DxSUITE Overview
- Architecture / Product Configuration
  - Components
  - Utility Tools
  - Front Ends
- Additional Reports & Workflows

Day 2

- DFM Studio Updates / Demo
- Drawing Validator Updates / Demo

© 2021 Elysium – Confidential & Proprietary

ELYSIUM

DFM Studio

© 2021 Elysium – Confidential & Proprietary

ELYSIUM

DFM Studio

- What is DFM Studio?
  - DFM Studio is an Elysium solution designed to auto-evaluate the quality of your design in terms of manufacturability, machinability, and moldability based on the design CAD models.
- Pre-defined checks for:
  - Plastic parts
  - Sheet metal parts
- Latest version of DFM Studio:
  - V2.0

© 2021 Elysium – Confidential & Proprietary

Key Features: Full-automatic

Auto-recognize Geometries (Plastics/Mold)

Achieved by Elysium's best-in-industry geometry handling technology accumulated in the last two decades

Hole

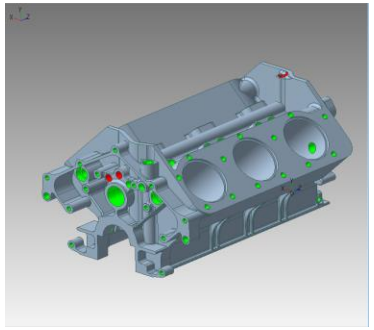

Boss

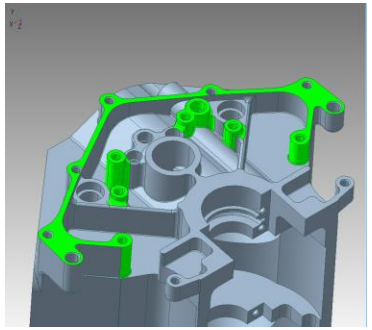

Rib

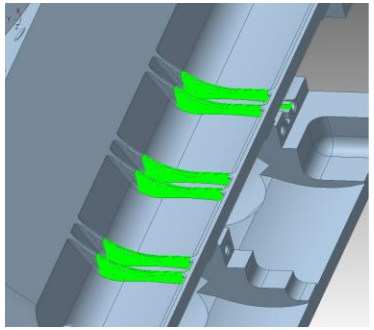

Fillet

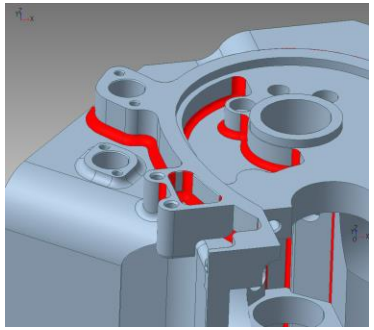

Sharp Edge

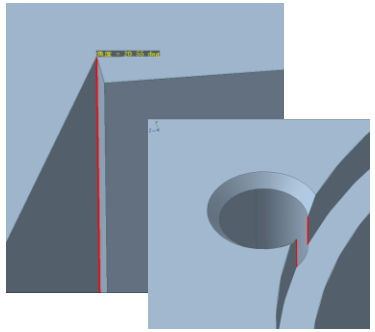

Thickness

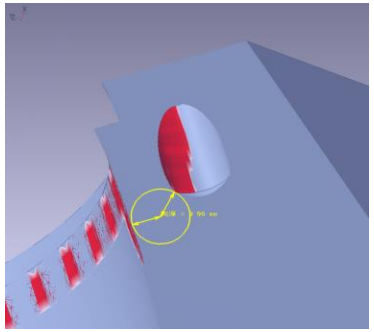

Clearance

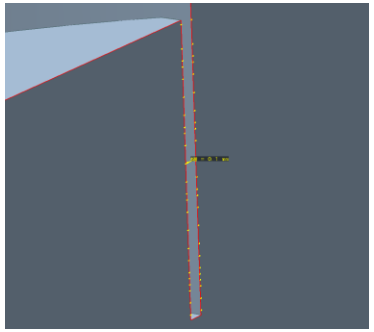

Undercut

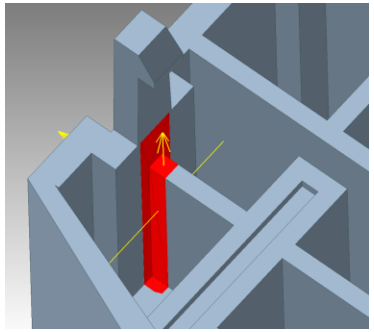

Mass Property

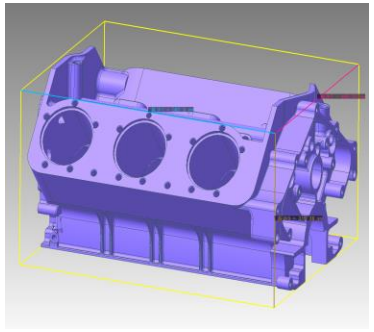

Draft Angle

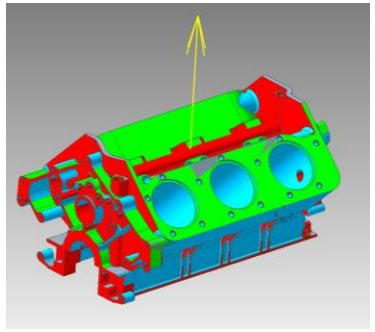

© 2021 Elysium – Confidential & Proprietary

Key Features: Full-automatic

Auto-recognize Geometries – For Sheet Metal

Achieved by Elysium's best-in-industry geometry handling technology accumulated in the last two decades

Hole

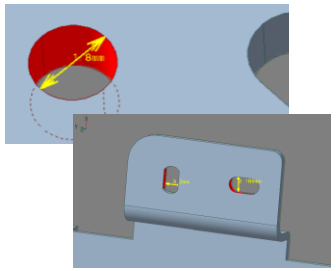

Bend

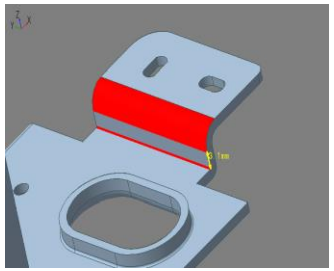

End Face

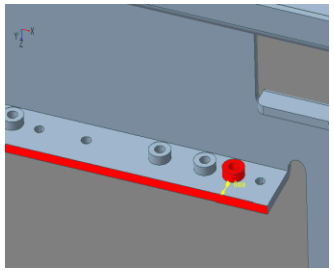

Burring

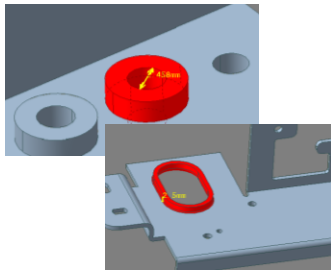

Dowel

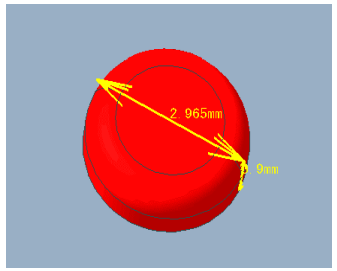

Half-punching

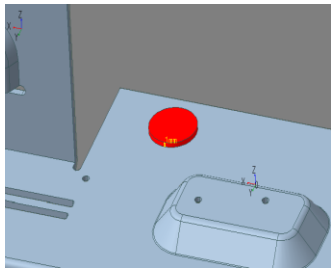

Overhang

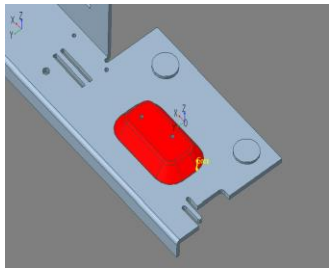

Groove

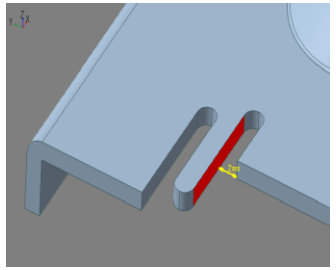

Thin Part

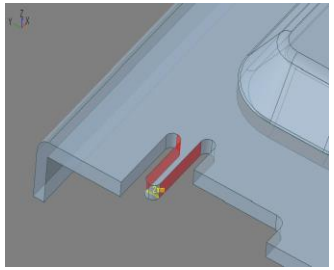

Flange

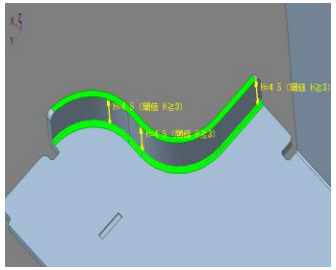

Heming

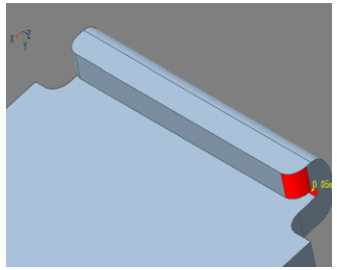

Bridge

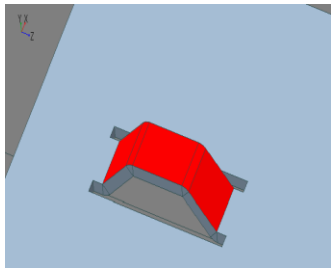

© 2021 Elysium – Confidential & Proprietary

Key Features: Full-automatic

Pre-set Criteria for Plastic (Resin)

Catch up with the highest-in-industry standards with pre-set criteria

List of Pre-set Criteria for Mold Design

**: To be added in a future release*

Thickness	Thick part	Thin part	Thickness ratio	Variation amount	
Clearance	Thin part (Mold)				
Undercut	Undercut	Slide stroke amount			
Draft Angle	Draft angle				
Sharp Edge	Sharp edge (Product)	Sharp edge (Mold)			
Boss	Ratio of height to outer diameter	Ratio of height to root thickness	Ratio of side thickness to root thickness	Ratio of base thickness to root thickness	Tip R
	Root R	Slope angle	Distance to surroundings	Hole base R	
Rib	Tip thickness	Ratio of height to root thickness	Ratio of root width to root thickness	Tip R	Root R
	Draft angle	Distance to neighboring rib			
Fillet (R)	Tiny fillet (R) (Product)	Tiny fillet (R) (Mold)			
Hole	Ratio of depth to pilot hole diameter	Distance to neighboring hole	Pilot hole diameter	Chamfer amount	Through or non-through
	Hole information				
Mass Property	External dimension	Volume	Projected area		

© 2021 Elysium – Confidential & Proprietary

Key Features: Full-automatic

Pre-set Criteria for Sheet Metal Design

Catch up with the highest-in-industry standards with pre-set criteria

List of Pre-set Criteria for Sheet Metal Design

**: To be added in a future release*

Thickness	Thickness	Inconsistency			
Bend	Tiny R	Height	Distance to neighboring bend	Bend relief	
Hole	Round hole diameter	Distance to part end face	Distance to bend		
Burring	Diameter	Height	Distance to neighboring burring	Distance to bend	Distance between burring hole and end face
Dowel	Height	Distance to neighboring dowel	Distance to bend	Distance between dowel hole and end face	Distance to burring
Half-punching	Height	Distance to neighboring half-punching	Distance to bend	Distance between half-punching hole and end face	
Overhang	Height	Distance to neighboring overhang	Distance between overhang hole and end face	Distance to burring	Distance to half-punching
Groove	Width (Thin area)				
Thin Part	Width				
Flange	TBD				
Heming	TBD				
Bridge	TBD				

© 2021 Elysium – Confidential & Proprietary

Key Features 1: Full-automatic

Analyze and View Results

Issues which fail check criteria will be listed in a table and can be inspected visually in viewer.

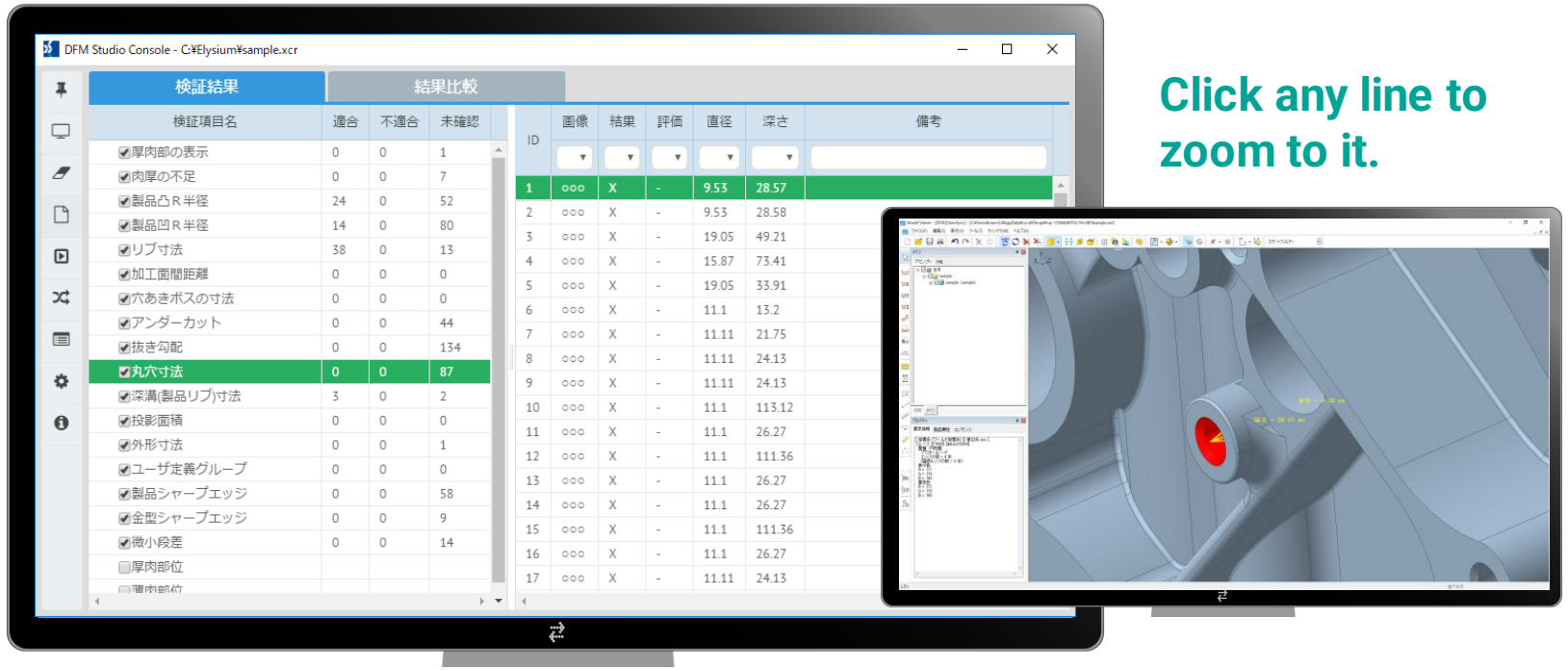

Click any line to zoom to it.

© 2021 Elysium – Confidential & Proprietary

Use Inspector as Console

- DFM Studio Inspector behaves as one application with ModelViewer and CAD synchronization.
- Also, the simplified table provides a more 3D view of the confirmation environment.

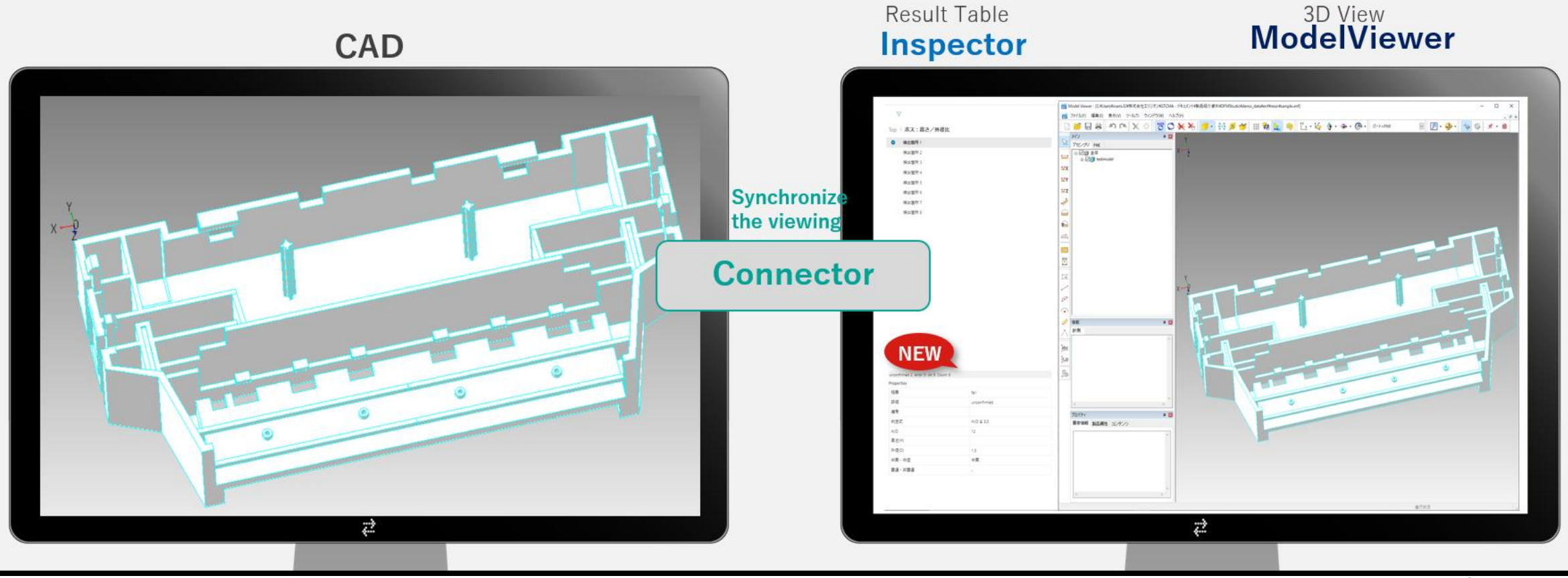

© 2021 Elysium – Confidential & Proprietary

DFM Studio Enhancements

© 2021 Elysium – Confidential & Proprietary

ELYSIUM

Enhancement Information

- Expanded Checking Capabilities
  - Direct check from the CAD system
  - Check from the Windows context menu
  - Expansion of CAD and viewer synchronization
- Performance Improvement
  - Improvement of check result list display performance
- More User-friendly Interface
  - Versatile screen structure to maximize the utilization of the 3D view
  - Enrichment of check result display
  - Automatic screen capture for report creation
- New Check Items Added and Improved
  - Plastic requirement checks
  - Sheet metal requirement checks

© 2021 Elysium – Confidential & Proprietary

Direct check from the CAD system

- Use DFM Studio on-demand while designing within the CAD system
  - Execute the check from the SmartLauncher CAD Plug-in menu

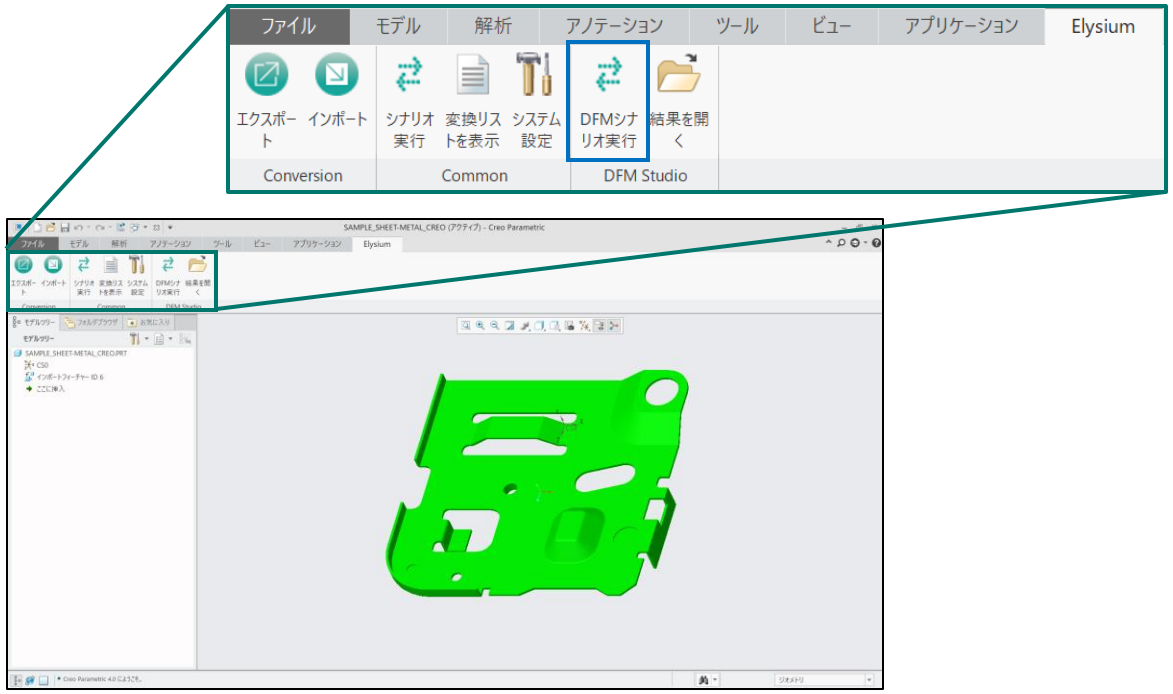

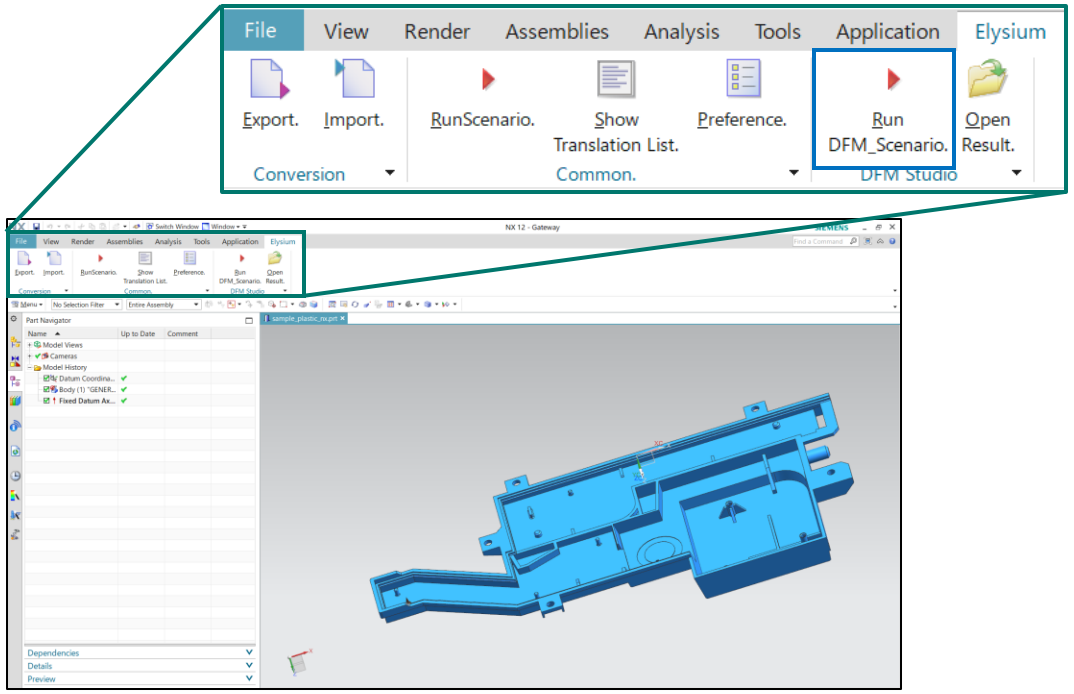

© 2021 Elysium – Confidential & Proprietary

ELYSIUM

Check from the Windows context menu

- Use DFM Studio by executing SmartLauncher (scenarios) directly from Windows Explorer

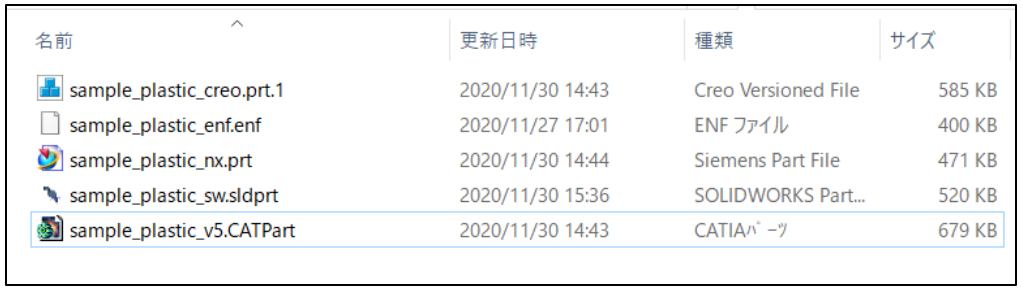

名前	更新日時	種類	サイズ
sample_plastic_creo.prt.1	2020/11/30 14:43	Creo Versioned File	585 KB
sample_plastic_enf.enf	2020/11/27 17:01	ENF ファイル	400 KB
sample_plastic_nx.prt	2020/11/30 14:44	Siemens Part File	471 KB
sample_plastic_sw.sldprt	2020/11/30 15:36	SOLIDWORKS Part...	520 KB
sample_plastic_v5.CATPart	2020/11/30 14:43	CATIAﾊﾟｰﾂ	679 KB

Windows context menu

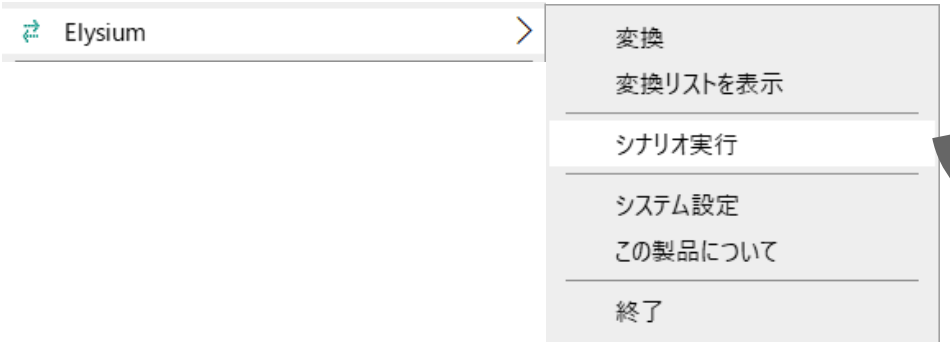

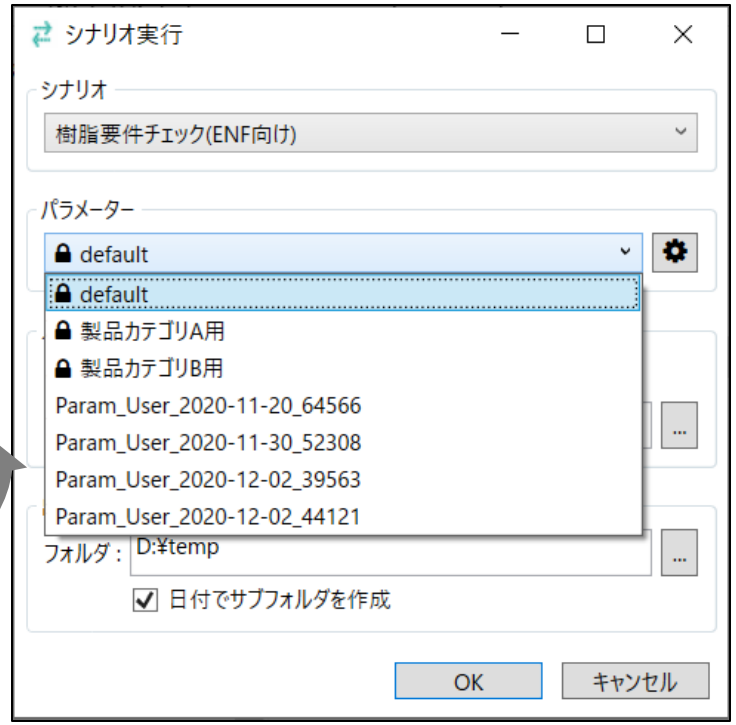

© 2021 Elysium – Confidential & Proprietary

ELYSIUM

Expansion of CAD and viewer synchronization

- Enhanced to support not only the synchronization between parts, but between assemblies and between part and assemblies
- DFM Studio can now be used in wider CAD design situations

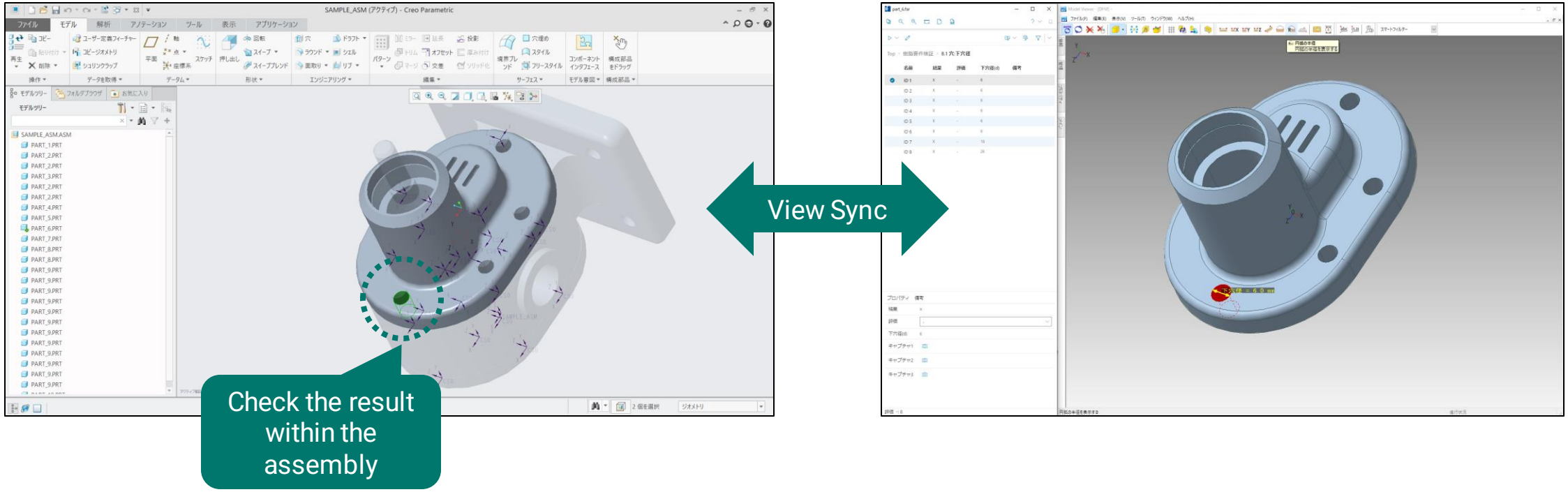

*: It requires a CAD Connector license to use this function

© 2021 Elysium – Confidential & Proprietary

ELYSIUM

Improvement of check result list display performance

- Start inspecting through the check result before the 3D model is displayed for more efficient check result confirmation

Check result list loading time comparison (Ver1.5 vs Ver2.0)

Case 1: Check result list loading times in Ver1.5 are under 1 min

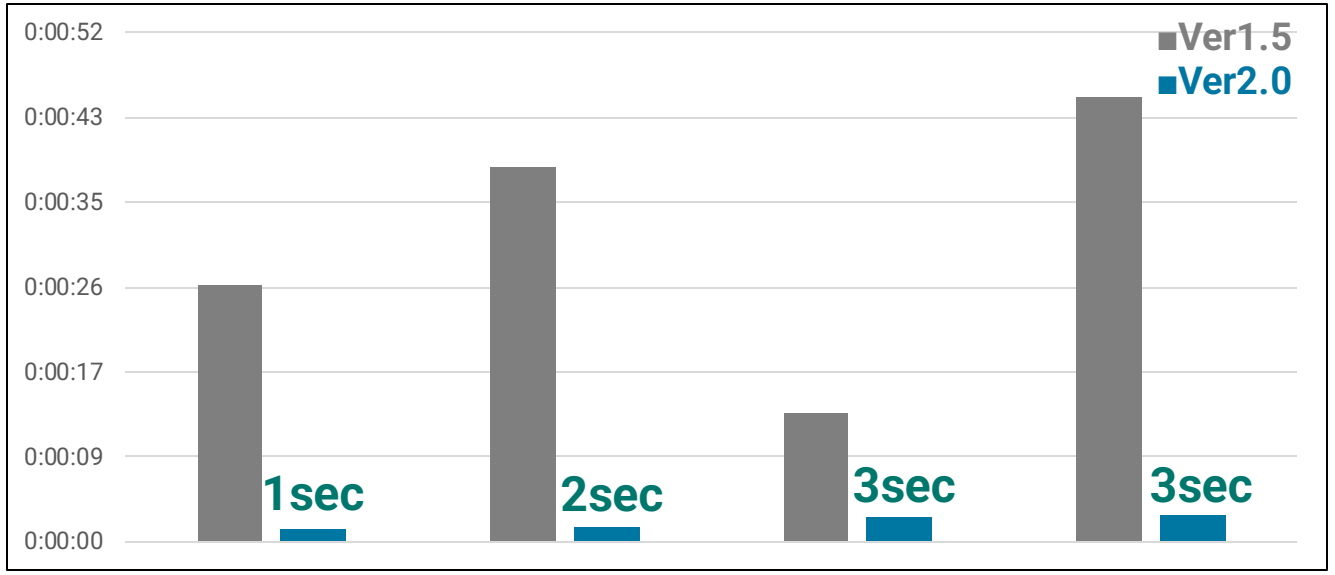

(h:mm:ss)

Case 2: Check result list loading times in Ver1.5 are over 1 min

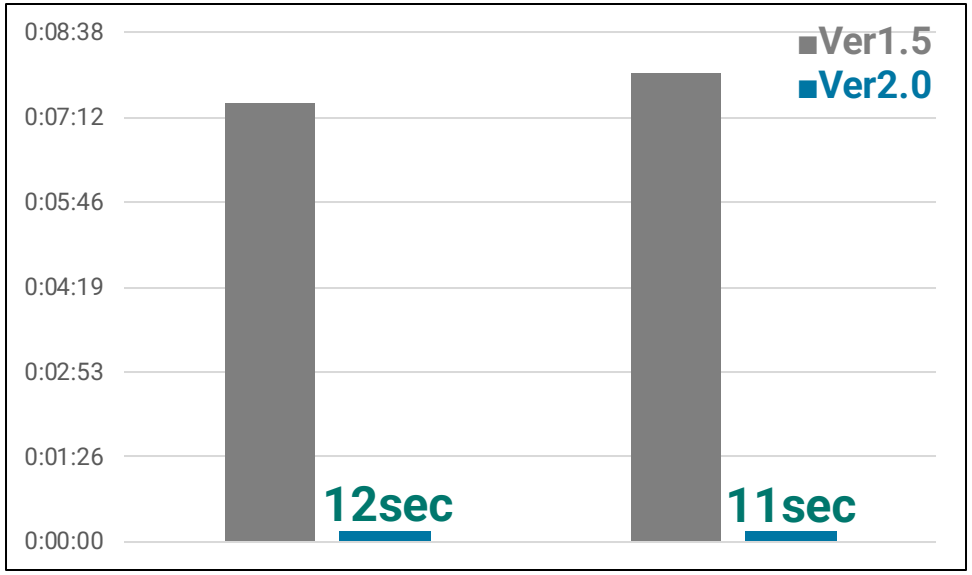

(h:mm:ss)

Inspector instantly displays the check result list which took more than 5 min in Ver1.5

© 2021 Elysium – Confidential & Proprietary

ELYSIUM

Enhanced navigation

- Condensed navigation through checking criteria to maximize 3D view

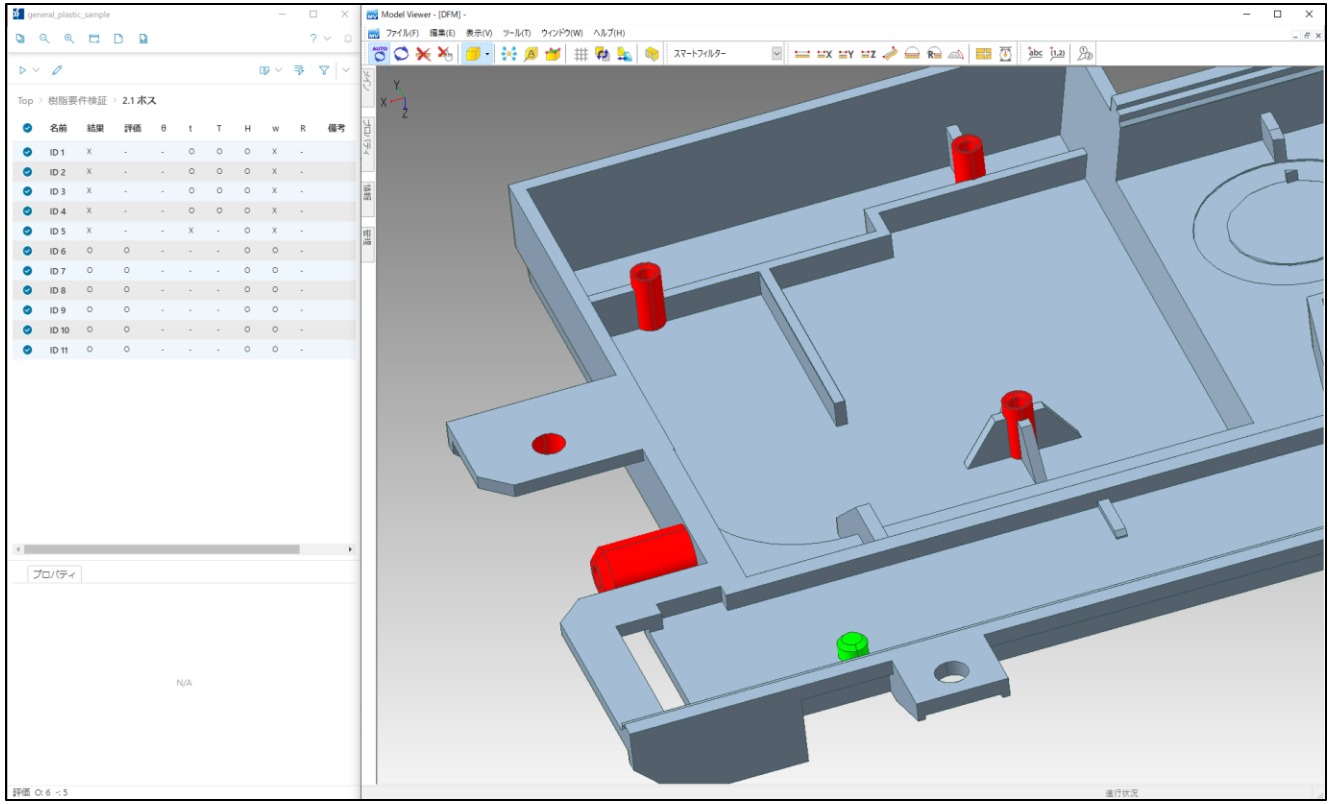

*: There are other function enhancements such as preview of the screen capture, etc. (refer to Inspector's operation manual, "DFM_Studio_Inspector_Manual_en.pdf" for more information)

© 2021 Elysium – Confidential & Proprietary

Enrichment of check result list display

- Improved navigation and display of detected issues.
- See only what you need to see by showing and hiding dimensions within the 3D view

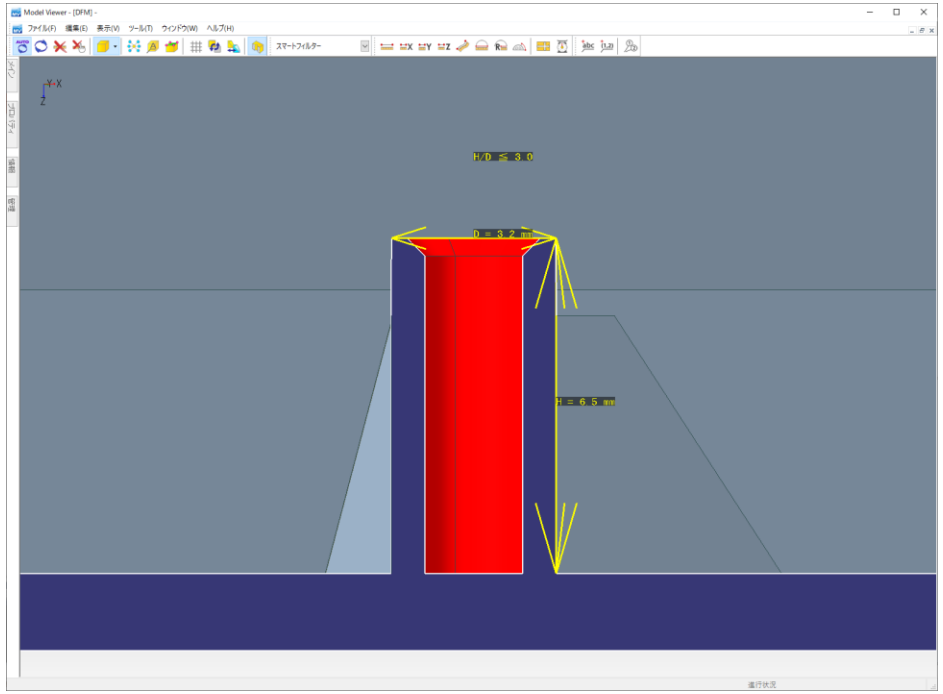

View the cross section automatically at the view direction of the result

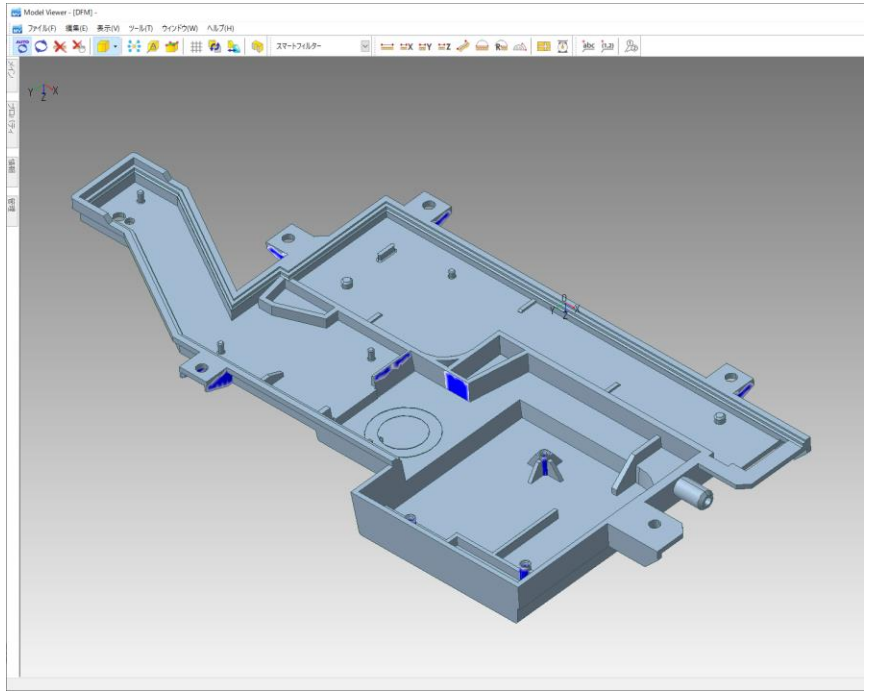

Hide dimensions that could reduce the visibility in the overall view

© 2021 Elysium – Confidential & Proprietary

ELYSIUM

Automatic screen capture for report creation

- Minimize the workload to create screen captures of the check result by utilizing the automatic screen capture function

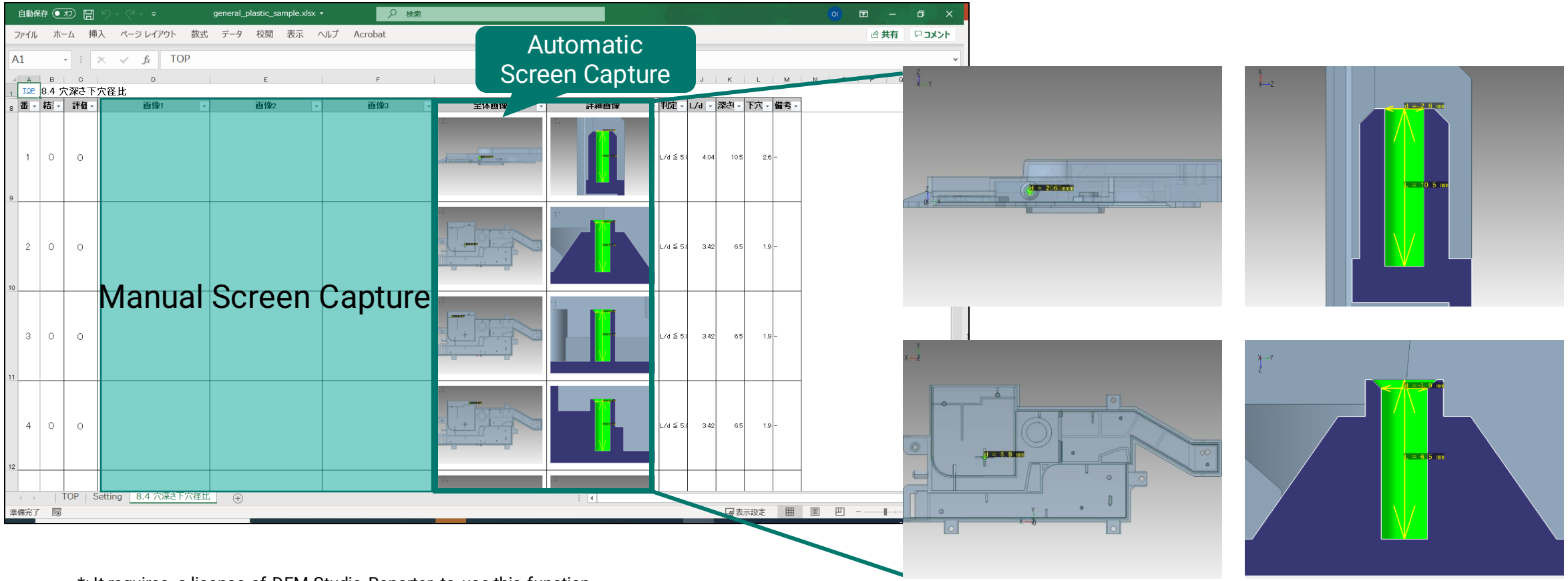

*: It requires a license of DFM Studio Reporter to use this function

© 2021 Elysium – Confidential & Proprietary

ELYSIUM

Plastic requirement check enhancement information

1. Wall Thickness/Thin Wall
   - ✓ Supported evaluation based on standard wall thickness
   - ✓ Added an option to exclude the tip for thin wall
2. Boss
   - ✓ Integrated check items
   - ✓ Added tip width check item
3. Rib
   - ✓ Integrated check items
   - ✓ Added tip R check item
4. Slide Stroke (NEW)
   - ✓ Added the check item
5. Thin Area (Mold)
   - ✓ Changed the check result display method
6. Draft Angle
   - ✓ Added an option to view detailed results
7. Others

*: Refer to Plastic Requirement Check Item/Geometry Recognition Setting Guide "DFM_Studio_CheckItem_Guide_Plastic_en.pdf" for details

© 2021 Elysium – Confidential & Proprietary

ELYSIUM

Sheet metal check enhancement information

- 23 additional sheet metal checks added (38 total) and organized into categories

© 2021 Elysium – Confidential & Proprietary

ELYSIUM

Demo

© 2021 Elysium – Confidential & Proprietary

ELYSIUM

Drawing Validator

© 2021 Elysium – Confidential & Proprietary

ELYSIUM

Drawing Validator

- What is Drawing Validator?
  - Compares two CAD drawings; detects and reports differences of:
    - Sheets
    - Views
    - Attributes
    - Dimensions, symbols, notes, feature control frames, etc
- Drawing Validator features include:
  - Report is in monolithic HTML supported by popular browsers
  - Interface and Command Line execution
  - Configurable options to fine tune checking
  - Drawing Validator Viewer allows the user to highlight and comment on detected issues
- Latest Release of Drawing Validator
  - V2.3.3

© 2021 Elysium – Confidential & Proprietary

Drawing Validator

- What’s new in the latest Drawing Validator v2.3.X?
  - Added Support for the Latest CAD Versions
    - Creo Parametric 7.0
    - NX 1953 Series
  - Support for single file Drawing Validation report
    - The Drawing Validation report, which used to consist of multiple HTML files, has been changed to a single HTML file.

© 2021 Elysium – Confidential & Proprietary

Demo

© 2021 Elysium – Confidential & Proprietary

ELYSIUM

Thank you for your time today

- Contact Information
  - Please send your questions and feedback to
    - Dan Dezarov
    - dan.dezarov@elysiuminc.com

Elysium
3DxSUITE™

All rights reserved by Elysium or the original author of this material.
The content may not be edited, reproduced, distributed, transmitted, displayed, published, broadcast, sold or lent without the prior permission of the author.